OVERLAND VEHICLE SYSTEMS

Off-Road Bottle Jack
Instructions

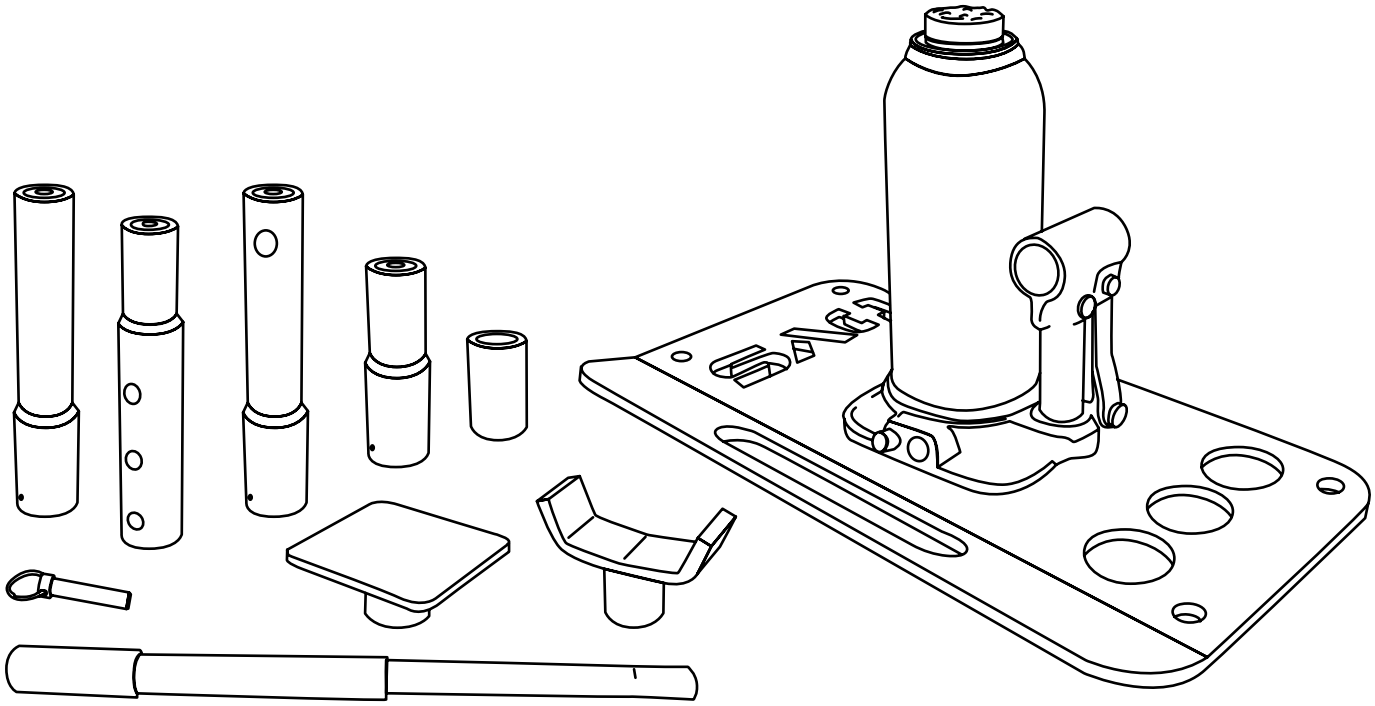

CLICK HERE TO WATCH INSTRUCTIONAL AND OVERVIEW VIDEO

NOVEMBER 2026

Off-Road Bottle Jack

SET-UP & CARE INSTRUCTIONS

WARNINGS

Do not allow anyone inside or near the vehicle while the jack is in use. Vehicle movement or shifts in weight can cause instability and increase the risk of injury. Ensure all personnel remain at a safe distance from the vehicle at all times.

Do not attempt to lift the vehicle on a side slope or longitudinal incline. The vehicle may slide or roll unexpectedly, resulting in severe injury or death.

Before lifting, place the vehicle's transmission in "PARK" for automatic transmissions and "LOW GEAR" for manual transmissions. Set the vehicle's emergency brake. Then, block the wheel diagonal to the wheel that is being lifted, with wheel chocks. Failure to follow this instruction can result in severe injury or death to personnel.

GET TO KNOW YOUR BOTTLE JACK

Not all parts are required for usage. It is entirely situational when deciding which extensions and cradles to use.

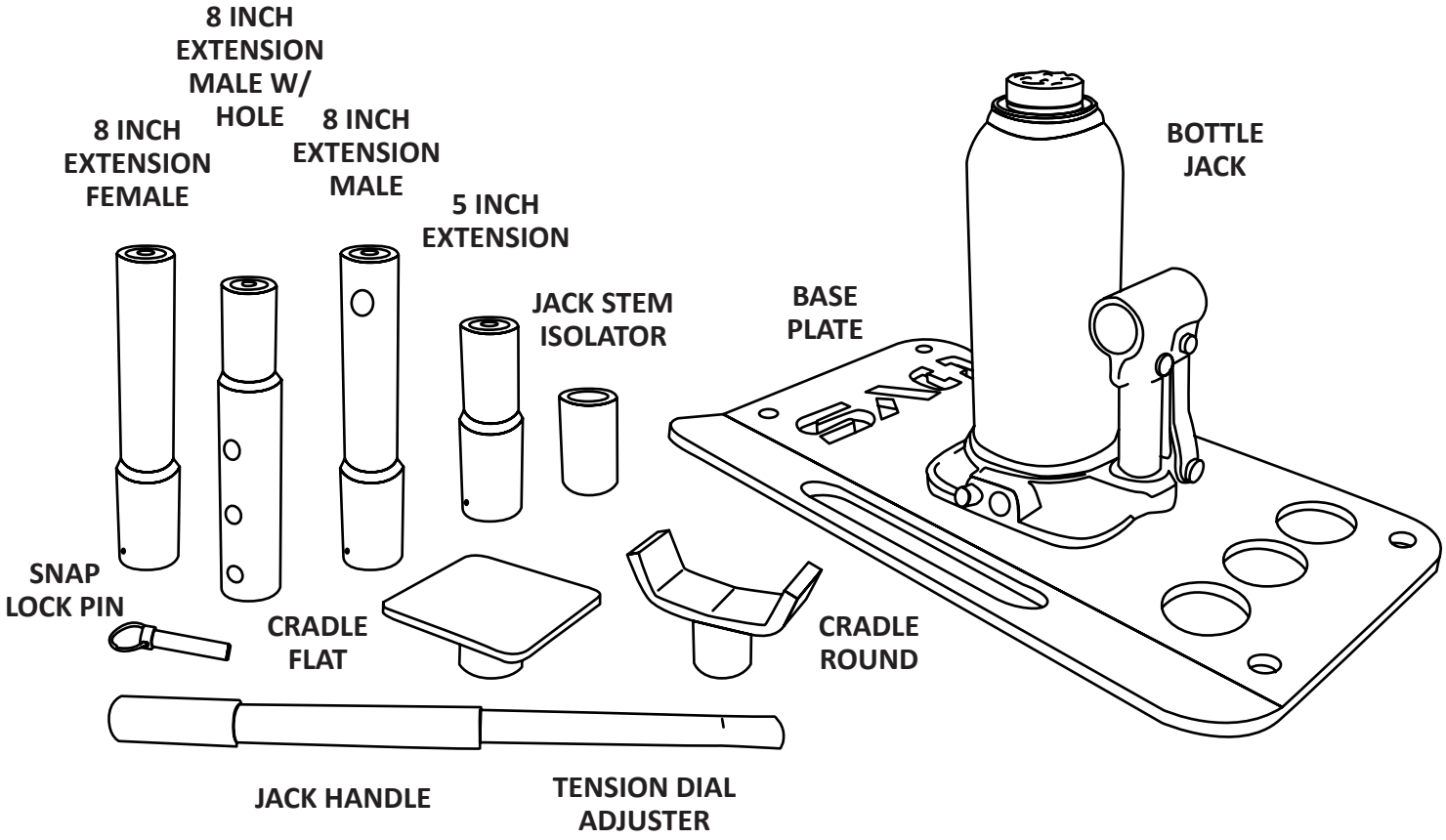

WARNING: Never use a hydraulic jack as the sole means of supporting a vehicle. Immediately after lifting, support the vehicle with a pair of appropriately rated jack stands. Ensure the transmission is in PARK, the parking brake is engaged, and the wheels are securely chocked to prevent unintended vehicle movement. Failure to follow these instructions may result in serious injury or death.

INSTALLING THE JACK STEM ISOLATOR

1

Unscrew the top of the bottle jack.



Insert the screw through the jack stem isolator



Screw back into the bottle jack



HOW TO USE THE HANDLE

2

Connect the 2-Piece Handle

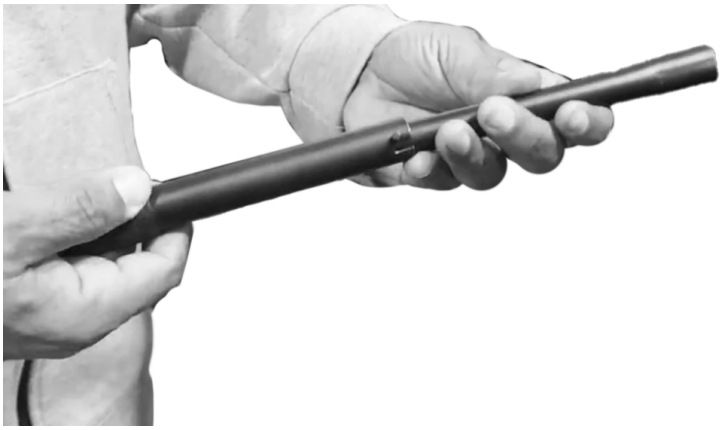

Twist the dial counter clockwise.



NOTE: When lowering the ram, turn the dial the opposite way and the weight of the vehicle should bring the bottle jack down. You may also apply pressure to the top of the bottle jack if not under a vehicle.

Then disassemble the handle



Insert into the crank joint and lift handle up and bring down repeatedly to raise the ram



USING THE EXTENSIONS

3

Ensure the Jack Stem Isolator is installed before you use any extensions for stability and safety. When using the extensions with the holes, use the pin lock in order to secure the extensions.

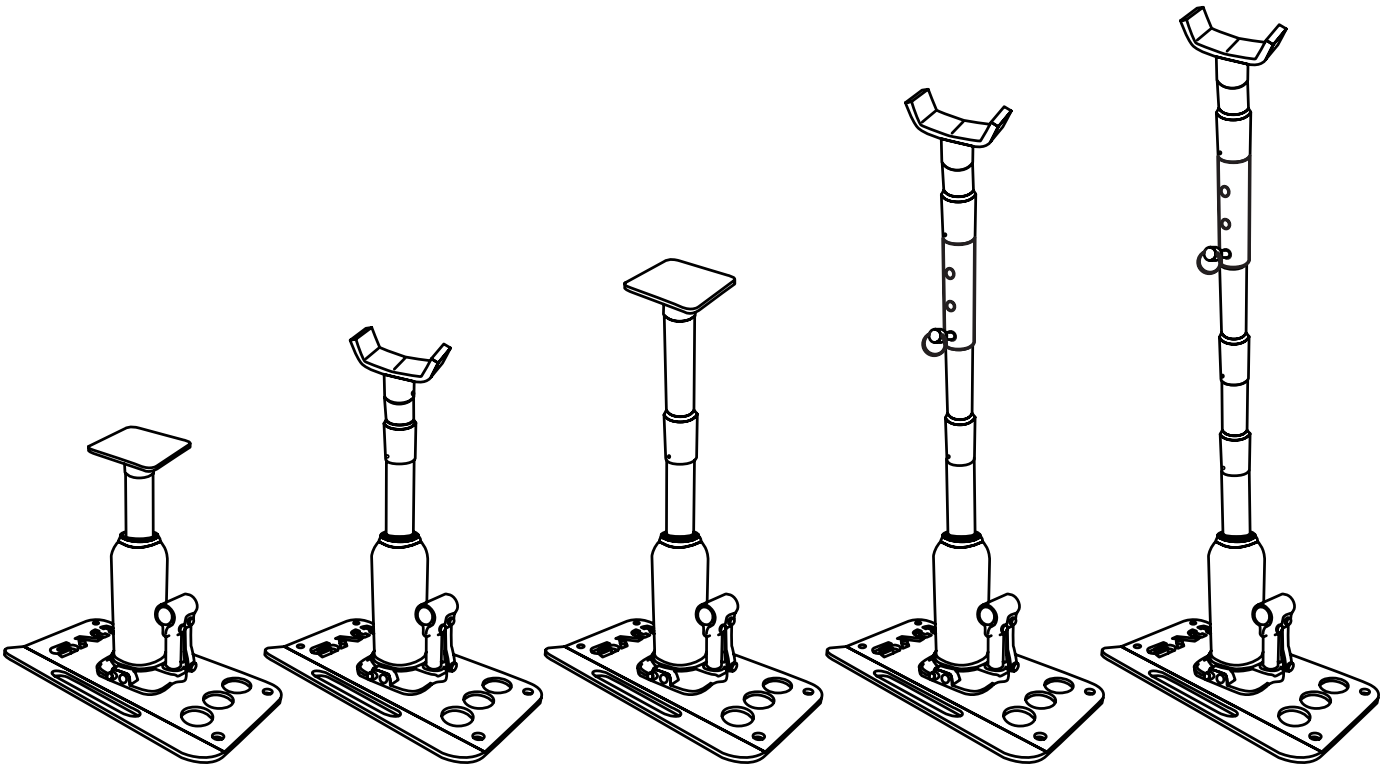

16.25"

1. Jack Stem Isolator
2. Cradle Flat

19.50"

1. Jack Stem Isolator
2. 5 inch Extension
3. Cradle Round

22.25"

1. Jack Stem Isolator
2. 8 inch Extension Male
3. Cradle Flat

31.75"

1. Jack Stem Isolator
2. 8 inch Extension Male with Hole
3. 8 Inch Extension Female
4. Snap Lock Pin
5. Cradle Round

37.75"

1. Jack Stem Isolator
2. 8 inch Extension Male
3. 8 inch Extension Male with Hole
4. 8 Inch Extension Female
5. Snap Lock Pin
6. 5 Inch Extension
7. Cradle Round

SWITCHING THE ORIENTATION (OPTIONAL)

4

Unscrew the 2 screws on the corners of the bottle jack that are connected to the base



Rotate the bottle jack 90 degrees



Line up with the screw points and apply the 2 screws to the corners of the bottle jack.



USING THE JACK ON A VEHICLE

5

Ensure your vehicle is parked and chocks are placed on the opposite side's wheels.

Place jack under hitch/axle



Apply a flat cradle on the top of the jack extensions if lifting from hitch receiver.

Apply a round cradle if lifting from vehicle axle

Loosen tension dial using the handle (See Step 1)

Once jack is under hitch receiver/axle,

Crank up using the handle to raise the ram (See Step 2)

RECOMMENDED: Apply jack stands to axle of vehicle for added support.



Tighten tension dial using 2-Pc Handle to lower vehicle down.

Off-Road Bottle Jack

SET-UP & CARE INSTRUCTIONS

CLEANING

Clean with cold water and sponge or wash cloth.

STORING

It is highly recommended to store all components in the provided storage organizer bag.

Use all slots and pockets to prevent any damage.



WARRANTY

This Off-Road Bottle Jack is warranted to the original retail purchaser to be free from defects in materials and workmanship for the lifetime of the product under normal use and service. This warranty covers repair or replacement, at the manufacturer's sole discretion, of any product determined to be defective. This warranty does not cover damage resulting from misuse, abuse, overloading, improper installation, alteration, modification, normal wear and tear, accidents, neglect, corrosion, exposure to extreme conditions, or failure to follow operating and maintenance instructions. Cosmetic damage, finish deterioration, and commercial or rental use are also excluded from coverage. Proof of purchase is required for all warranty claims. This warranty is limited to the original purchaser and is non-transferable. To the fullest extent permitted by law, the manufacturer shall not be liable for any incidental, consequential, or indirect damages arising from the use or inability to use this product.

DO YOU NEED OUR HELP?

CUSTOMER SUPPORT 833-226-4863

SALES@OVERLANDVEHICLESYSTEMS.COM

WANT TO SHOW US YOUR RIG?
CHECK OUT OUR SOCIAL!

@overlandvehiclesystems